981 Bunk Bed

Assembly Instructions

BEDZ KING

Our prices let you sleep at night!

981 Bunk Bed

Assembly Video

FULL OVER FULL BUNK BED

Bedz King BK - 981EL-Trundle

Thank you for purchasing your bunk bed from Bedz King.

Every effort has been made to ensure your furniture is of the finest quality. If you have any questions, please do not hesitate to contact us at info@bedzking.com

READ THESE INSTRUCTIONS CAREFULLY BEFORE ATTEMPTING TO ASSEMBLE THIS BED

SAFETY WARNINGS AND GENERAL NOTES

✓ Follow the information on the warning labels on the upper bunk bed structure and on the carton. Do not remove warning label from the bed.

✓ Always use the recommended size mattress or mattress support, or both, to help prevent the likelihood of entrapment or falls.

✓ The top surfaces of the mattress must be at least 5"below the upper edge of the guardrails.

✓ **Do not** allow children under 6 years of age to use the upper bunk.

✓ **Prohibit** more than one person on the upper bunk.

✓ Periodically check and ensure that the guardrails, ladder and other components are in their proper position, free from damage, and that all connectors are tight.

✓ **Do not** allow horseplay on or under the bed.Always prohibit jumping on the bed.

✓ Always use the ladder for entering and leaving the upper bunk.

✓ **Do not** use substitute parts. Contact the manufacturer or dealer for replacement parts.

✓ Use of a night-light may provide added safety for a child using the upper bunk.

✓ If the bunk bed will be placed next to the wall, the guardrail that runs the full length of the bed should be placed against the wall to prevent entrapment between the bed and the wall.

✓ Always use guardrails on both long sides of the upper bunk.

✓ The use of a water or sleep floatation mattress is prohibited.

✓ Keep these instructions for future reference.

✓ We recommend assembling your bunk bed on the shipping carton to protect your floor or carpet. Be certain all staples are out of the box before beginning assembly on the shipping carton.

✓ **Strangulation Hazard** Never attach or hang items to any part of the bunk bed that are not designed for use with the bed for example, but not limited to hooks, belts, and jump ropes.

Pursuant to the Consumer Product Safety Improvement Act (CPSIA) Sec. 102 the manufacturer certifies compliance with the Consumer Product Safety Commission (CPSC) regulations listed below.

****** Product Information ******

BK 981 (Stairway) / BK 981EL (End Ladder)

BUNK BED -

Date of Manufacture:

Made in Brazil

Manufacturer:
Móveis Imperial
Rua Imperial, 233-Centro
Sao Bento Do Sul
SC 89290-187 - Brasil

Custodian of Test Records:
Manager of Compliance and Testing
Bedz King LLC
2920 114th St Suite 300
Grand Prairie TX 75050

Children's Product Certificates available at www.bedzking.com/certificates

****** Safety Testing Information ******

Testing performed at one or more of the following independent testing locations:

Instituto Senai de Tecnologia
São Bento do Sul - SC - Brazil

Instituto Senai de Tecnologia
Estancia Velha - RS - Brazil

TSCA Title VI and California 93120 Phase 2 Compliant for Formaldehyde

Date	Testing Location	Regulation
October 2024	SENAI-RS	15 U.S.C. § 1278a
October 2024	SENAI-RS	16 CFR 1303
October 2024	SENAI-SC	ASTM F 1427-13
October 2024	SENAI-SC	16 CFR 1213 and 16 CFR 1513

⚠ WARNING

To help prevent serious or fatal injuries from entrapment or falls:
- Never allow a child under 6 years on upper bunk.
- Use only matress which is 74" - 75" long and 52 1/2" - 53 1/2" wide on upper bunk.
- Use only matress which is 74" - 75" long and 52 1/2" - 53 1/2" wide on lower bunk.
- Ensure thickness of matress and foundaaon combined does not exceed 9" and matress is at least 5" below upper edge of guardrails.

* Use guardrails on both sides of upper bunk
* Prohibit horseplay on or under bed (s).
* Prohibit more than one person on upper bunk.
* Use ladder for entering and leaving upper bunk.
* STRANGULATION HAZARD - Never attach or hang items to any part of the bunk bed that are not designed for use with the bed, for example, but not limited to hooks, belts and jump ropes.

DO NOT REMOVE THIS LABEL

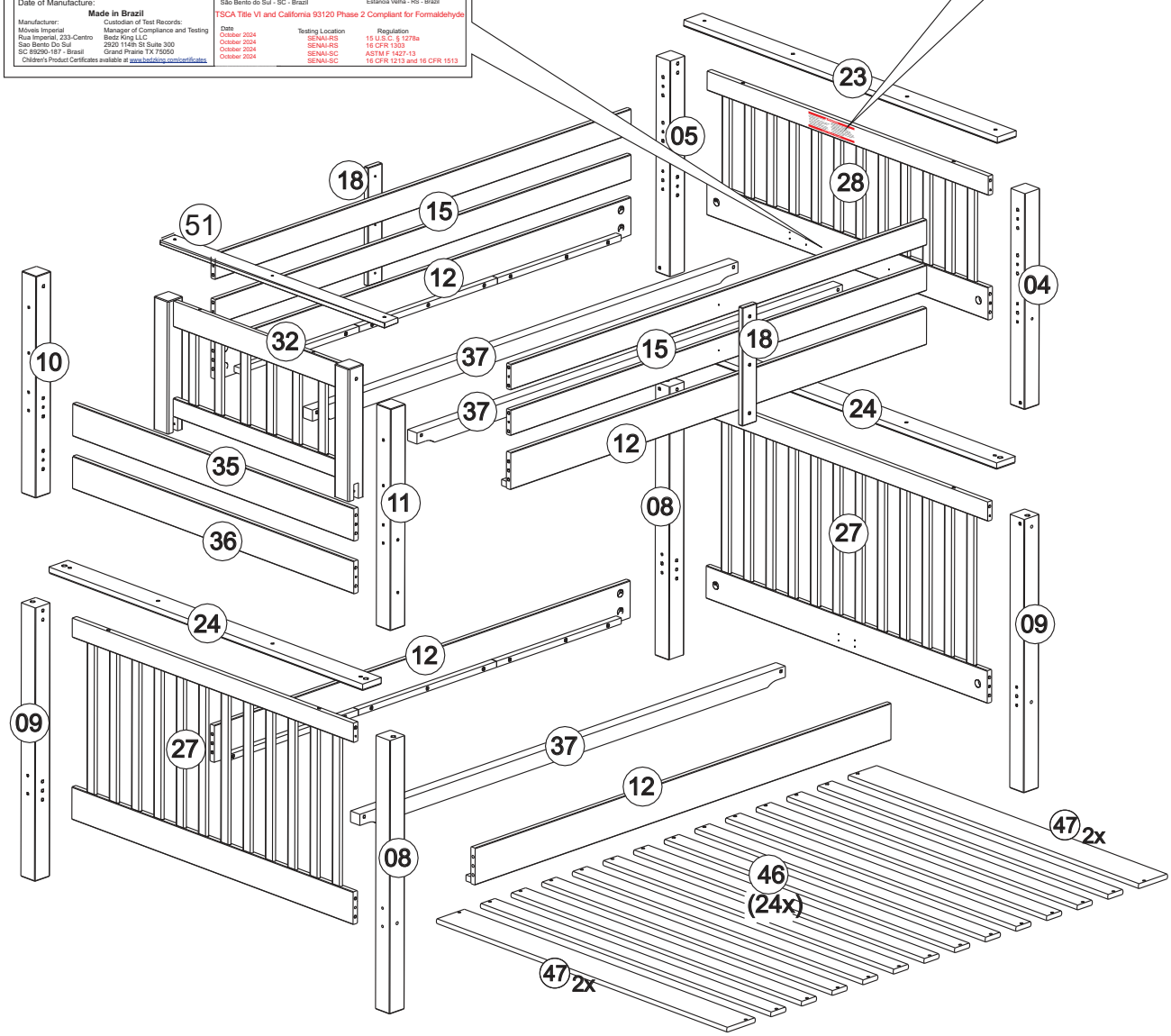

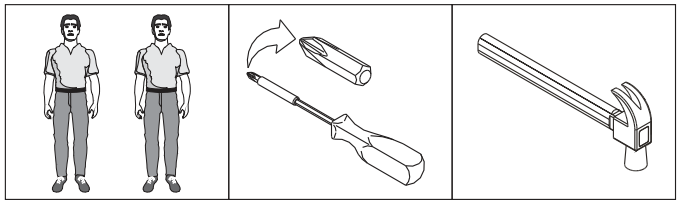

SCREWS ARE SHOWN IN ACTUAL SIZE

		Qty.	Extra
A5	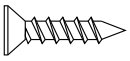 3,5x16	36	+2
A10	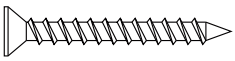 3,5x30	89	+4
B5	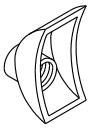 1/4"	24	+2
B7	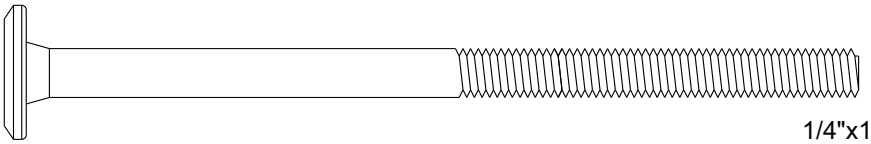 1/4"x100	24	+2
B16	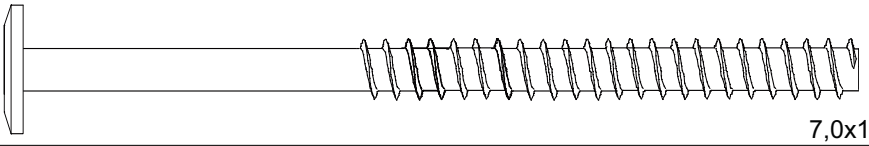 7,0x110	16	+2
C5	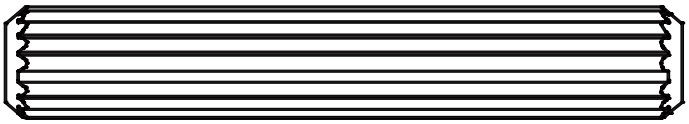 15x90	4	
C6	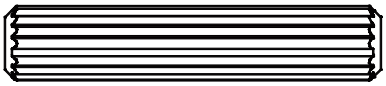 10x50	55	+2
D13	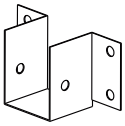	6	
G4	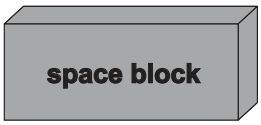	2	
G8	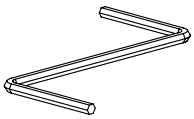	1	

WARNING:

CHOKING HAZARD - - Small Parts
Not for Children.
To be Assembled by an Adult.

01)

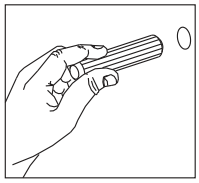

C6 - 50x

02)

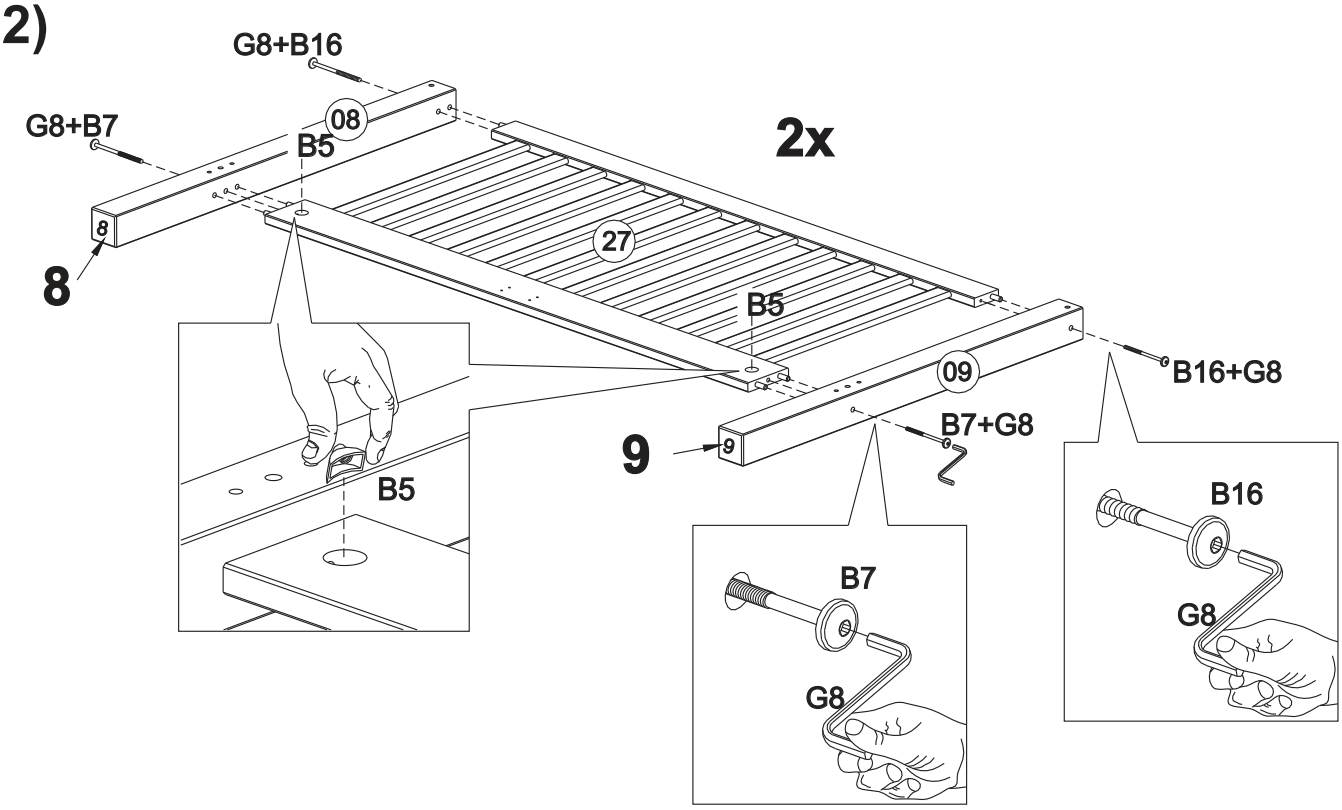

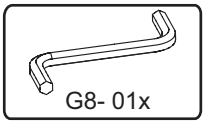

G8- 01x

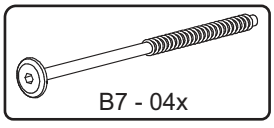

B7 - 04x

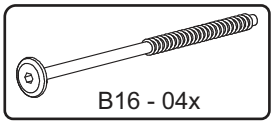

B16 - 04x

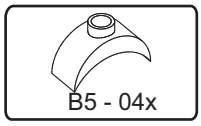

B5 - 04x

03)

B5
B5
27
12
B5
B5
B7+G8
B7+G8
B5
B5
27
12
G8+B7
G8+B7
B5
B5
G8+B7
G8+B7
B7
B7
G8
G8- 01x
B7 - 08x
B5 - 08x

04)

C5
C5
C5
C5
C5
A5
A5
A5
A5
D13
A5
A5
D13
A5 - 08x
D13 - 02x
C5 - 04x

05)

A10
A10
A10
A10
A10
A10
A10
A10
24
24
37
A5
A5
A5
A5
37

A10 - 08x

A5 - 04x

06)

G4
A10
47
46
46
47
A10
A10
A10
A10
A10
G4
47
A10
A10
46
(12x)
A10
A10
A10
A10
A10
G4
47

A10 - 28x

G4 - 02x

07)

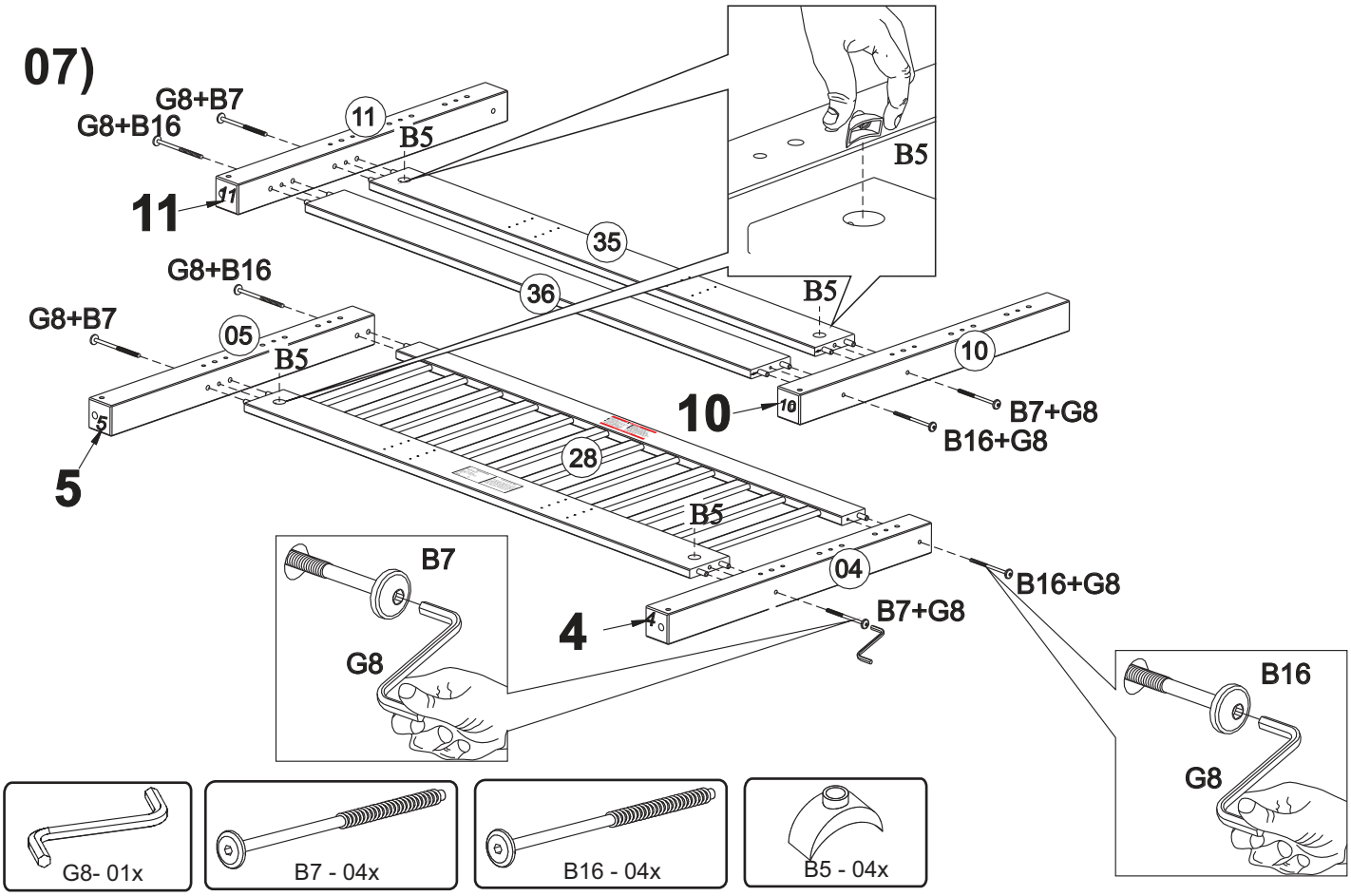

G8- 01x

B7 - 04x

B16 - 04x

B5 - 04x

08)

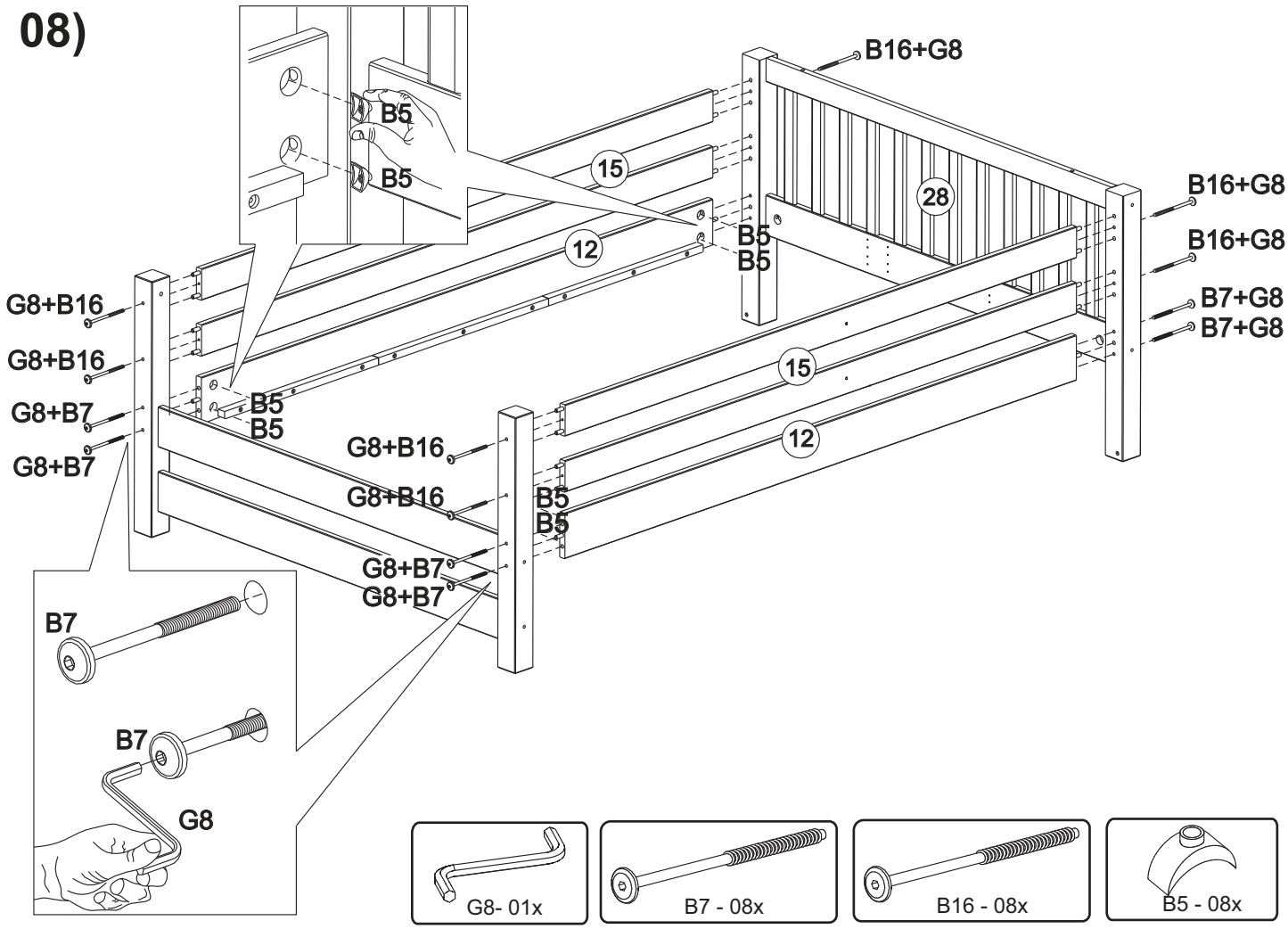

G8- 01x

B7 - 08x

B16 - 08x

B5 - 08x

09)

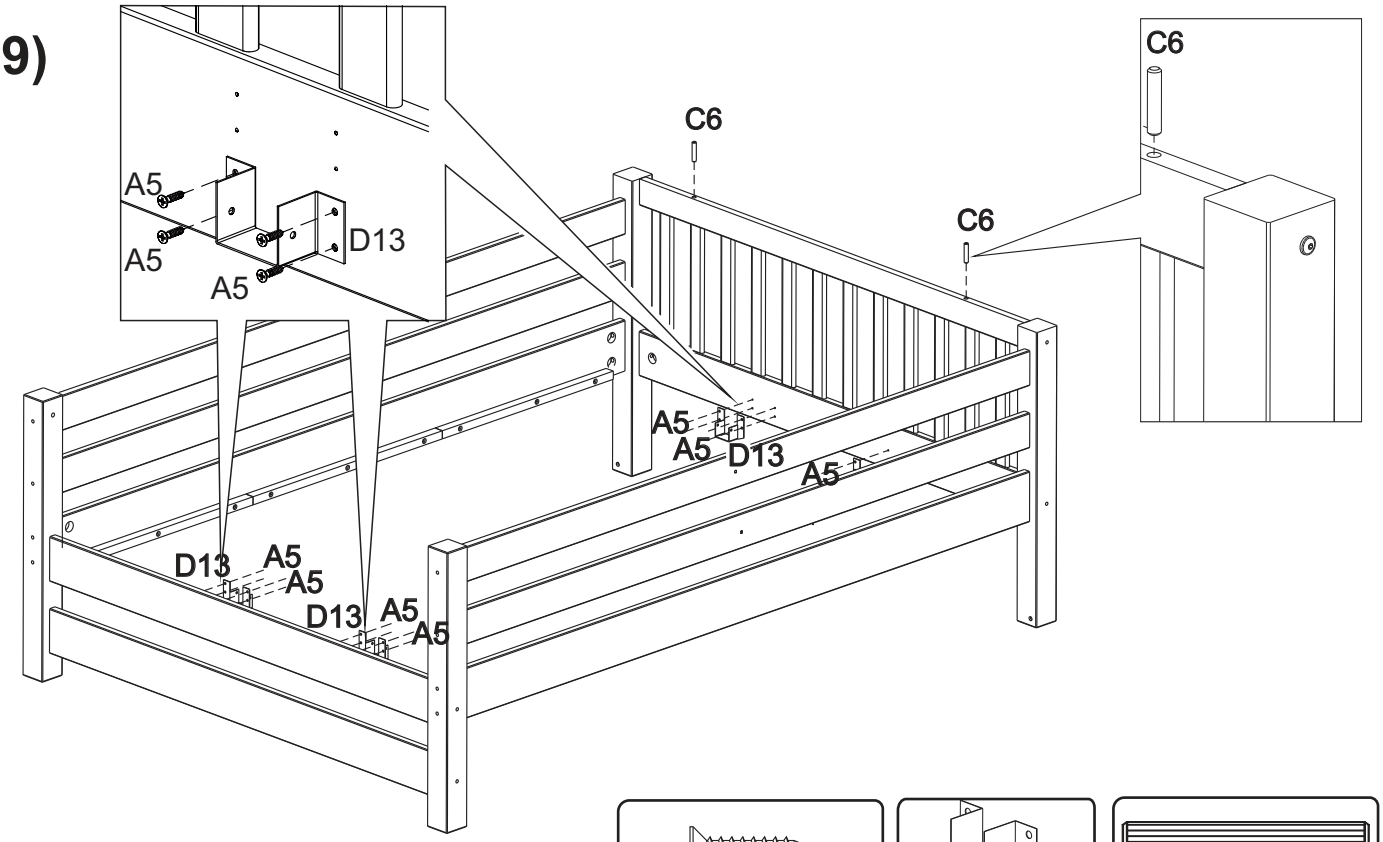

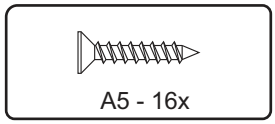
A5 - 16x

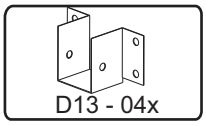
D13 - 04x

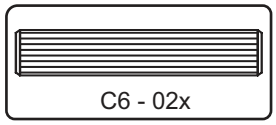
C6 - 02x

10)

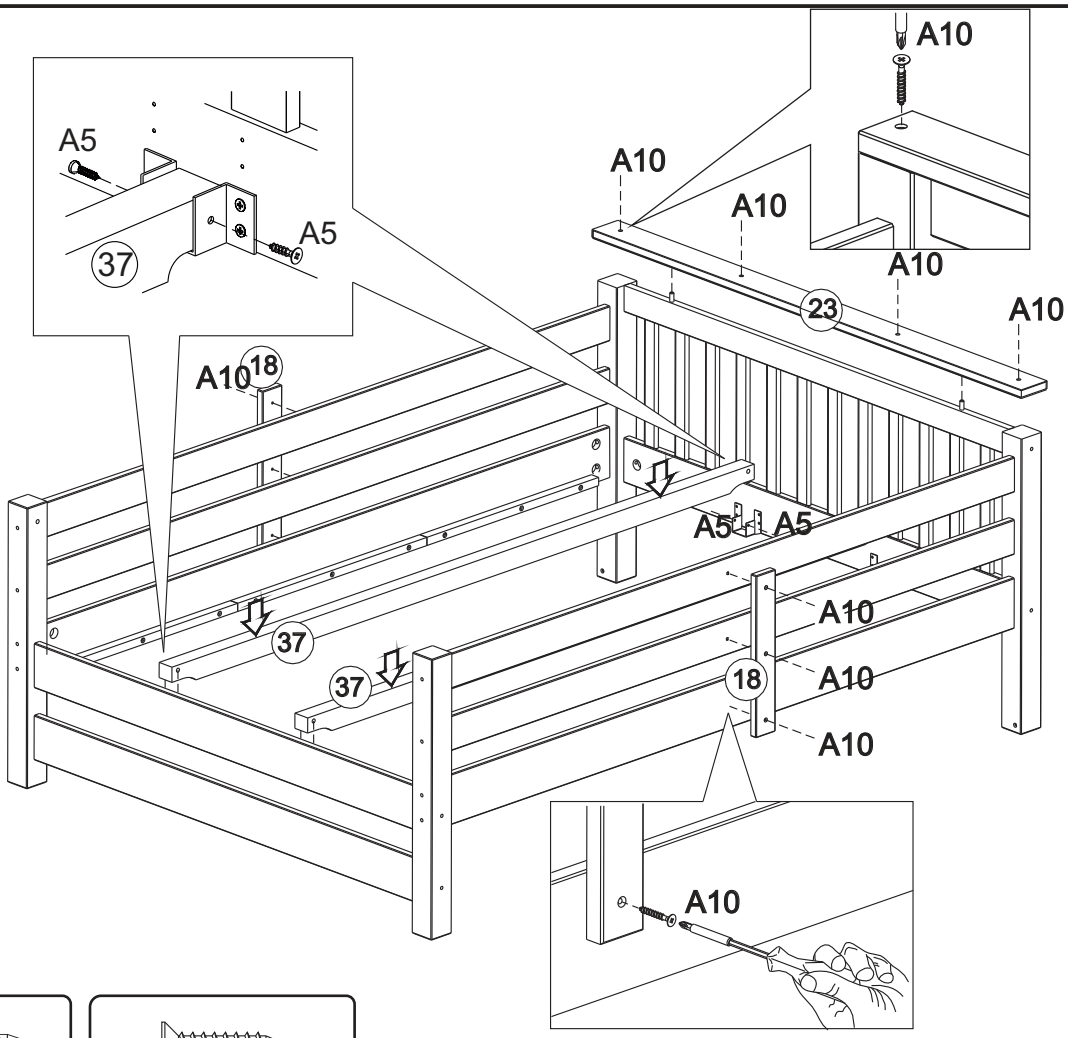

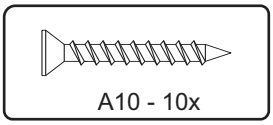
A10 - 10x

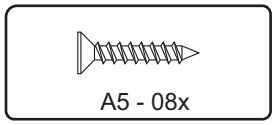
A5 - 08x

11)

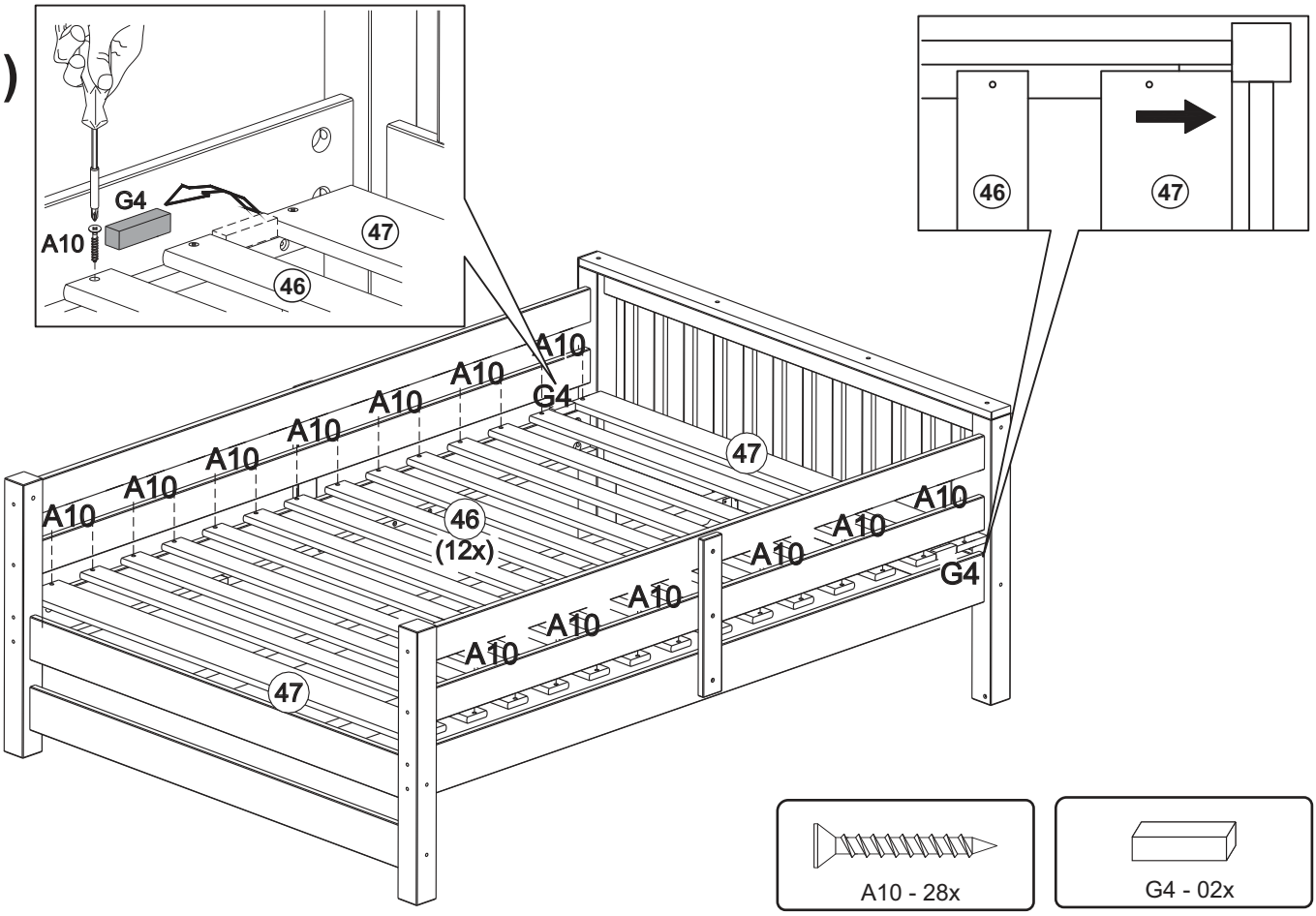
G4
A10
47
46
46
47
A10
A10
A10
A10
A10
A10
A10
G4
47
46
(12x)
A10
A10
A10
A10
A10
A10
G4
47
A10 - 28x
G4 - 02x

12)

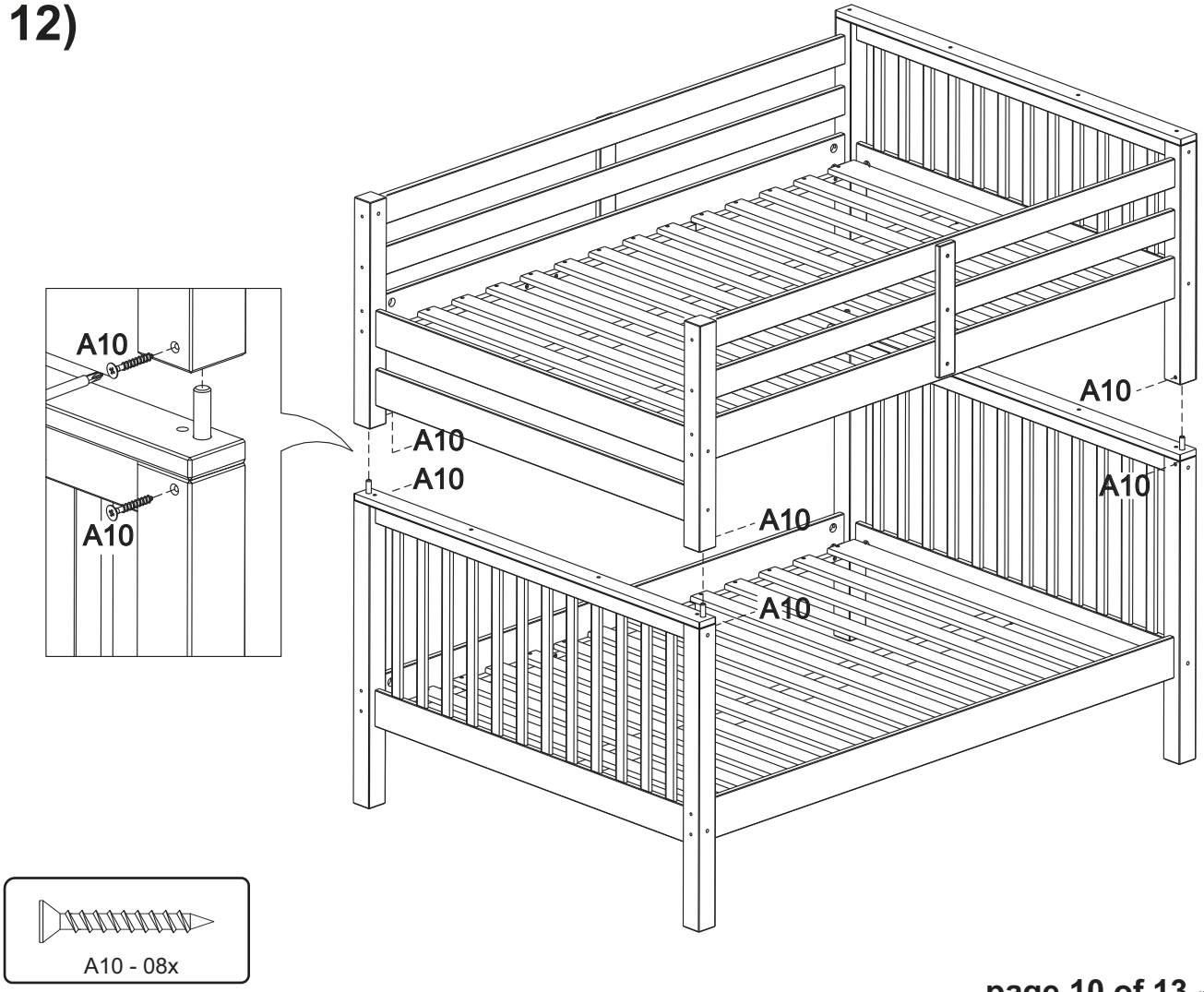
A10
A10
A10
A10
A10
A10
A10
A10
A10
A10 - 08x

13)

Option: LEFT

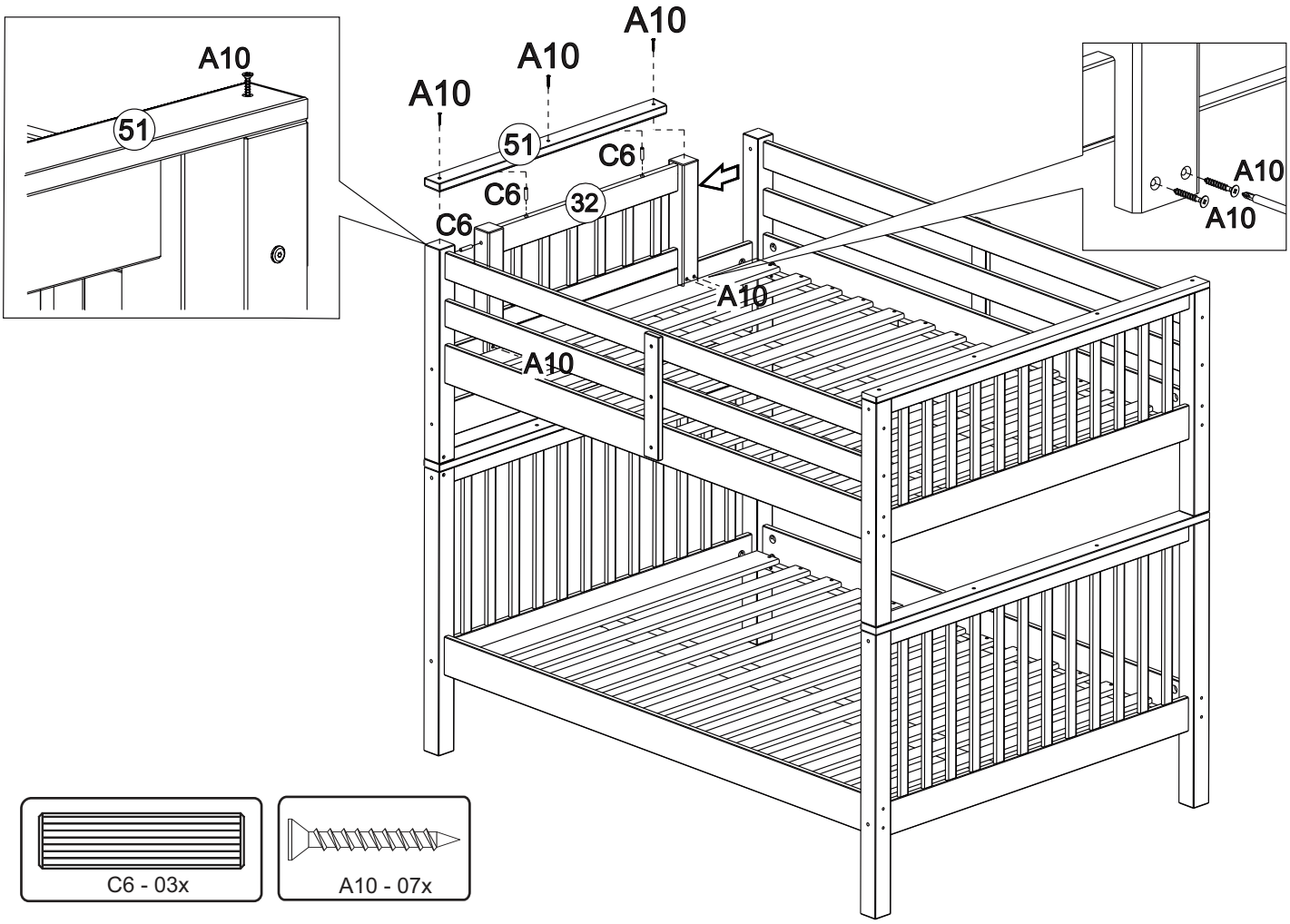

C6 - 03x

A10 - 07x

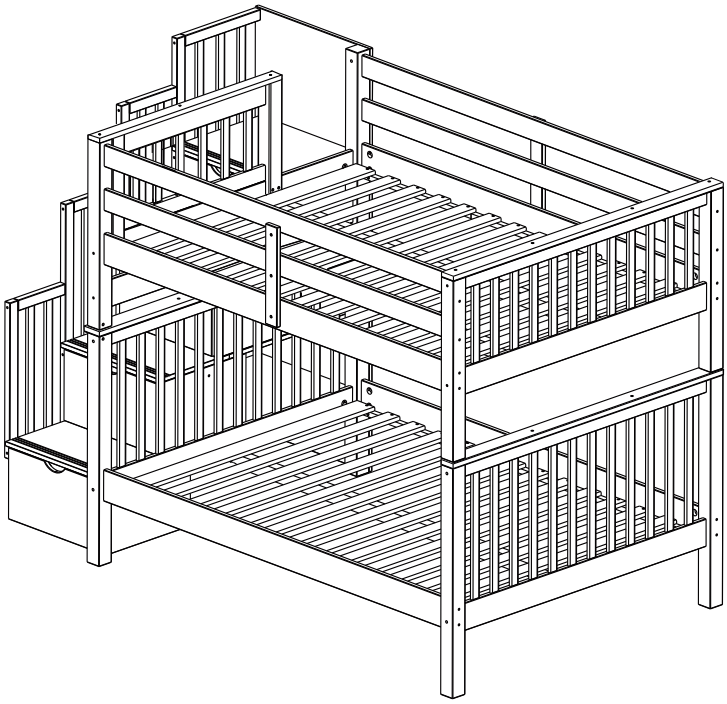

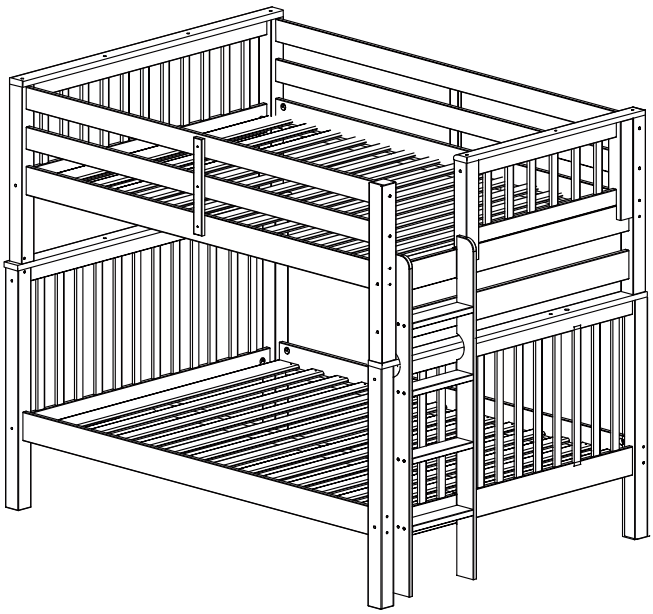

14)

Option: RIGHT

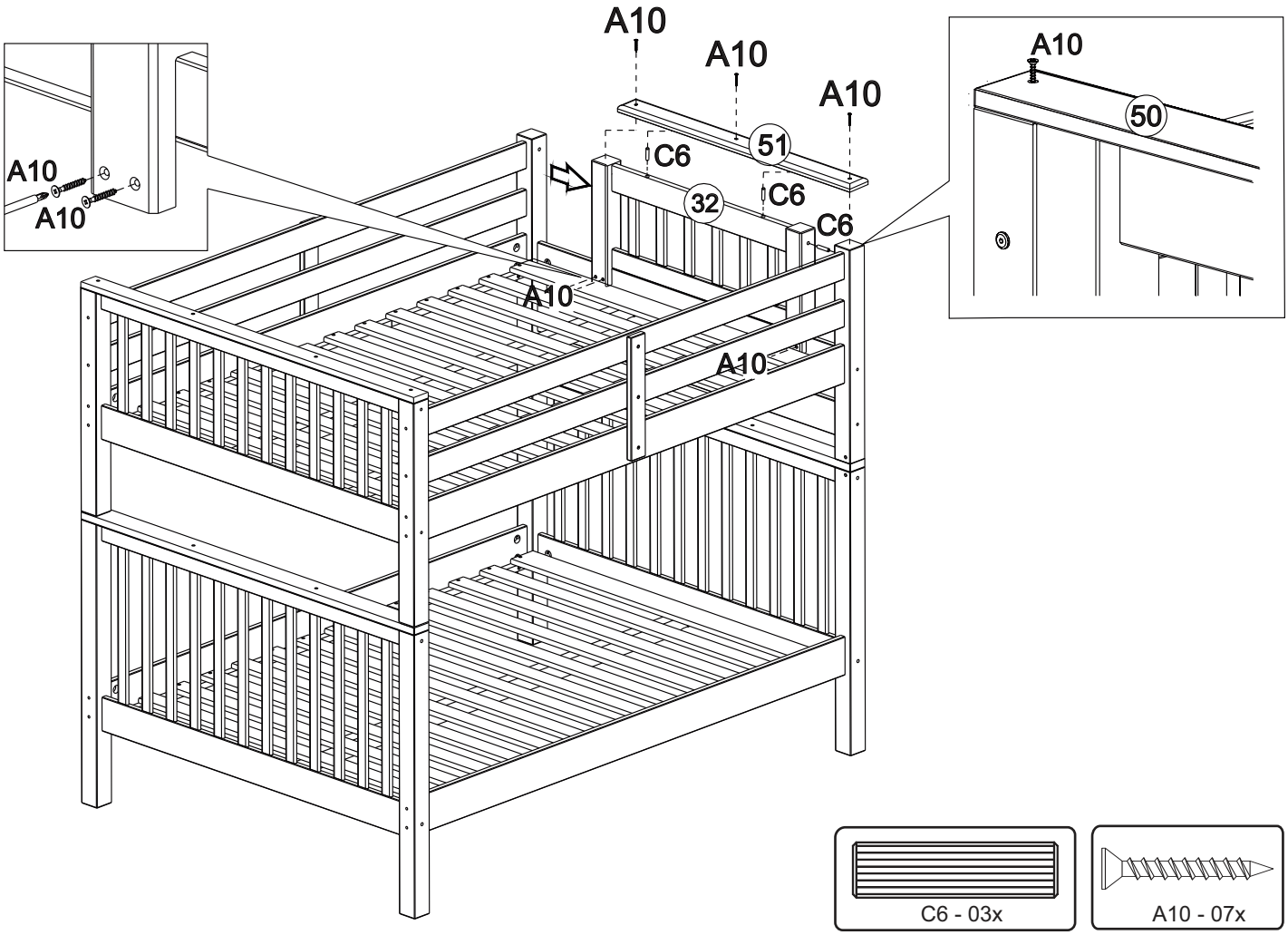

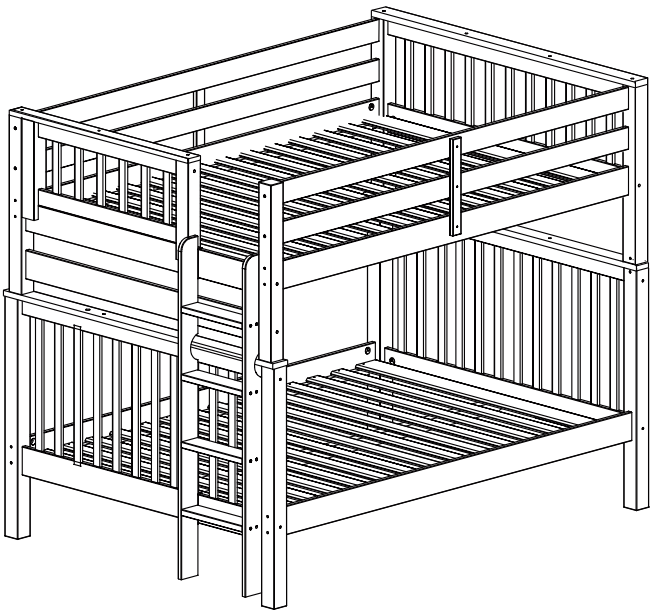

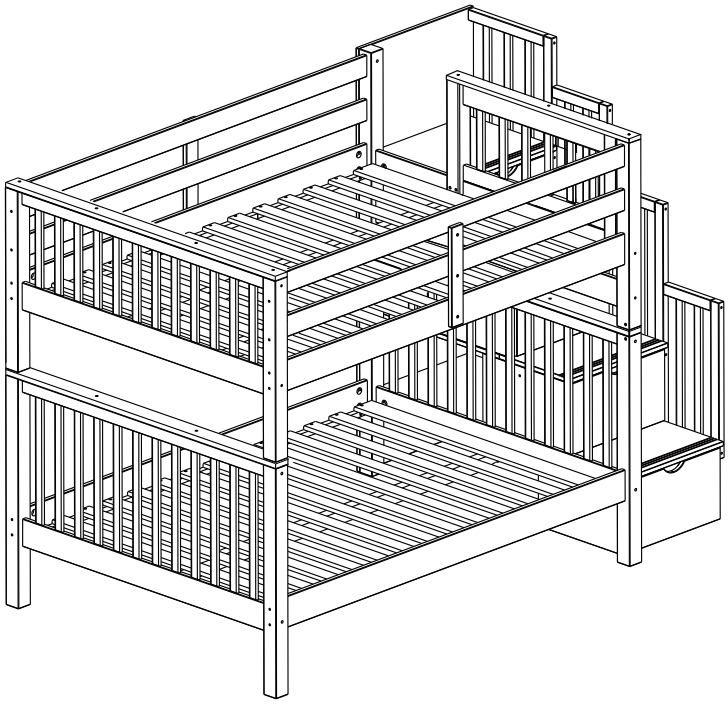

BEDDING SPECIFICATION

- Always use the recommended size mattress or mattress support or both, to help prevent the likelihood of entrapment or falls.
- All Bedz King bunk beds are supplied with a complete slat kit, so there is no need for a foundation or bunkie board.

BED MATTRESS SPECIFICATIONS

Upper Bunk: Only use a mattress that is 74" - 75" long and 52 1/2" - 53 1/2" wide on the upper bunk.
- Ensure thickness of mattress and foundation combined does not exceed 9".

Lower Bunk: Only use a mattress that is 74" - 75" long and 52 1/2" - 53 1/2" wide on the lower bunk.

REPLACEMENT PARTS

- Replacement parts, including additional guardrails may be obtained by contacting Bedz King LLC at info@bedzking.com
- Guard rails are not available for the lower bunk. This bunk bed is not designed or certified to have guard rails installed on the lower bunk.

ASSEMBLYTIPS

- Power tools are not recommended for assembling your furniture.
- Give yourself plenty of room to work.
- Due to the size of this bunkbed, it must be assembled within the space it will occupy.
- The assembly will require at least two people to complete.
- Make sure all the fasteners are tight.
- Take your time and read the instructions carefully.

81 4 Step Ladder

Assembly Instructions

BEDZ KING

Our prices let you sleep at night!

81 / 86 Ladder

Assembly Video

Ladder Bunk Bed

Bedz King BK - 81

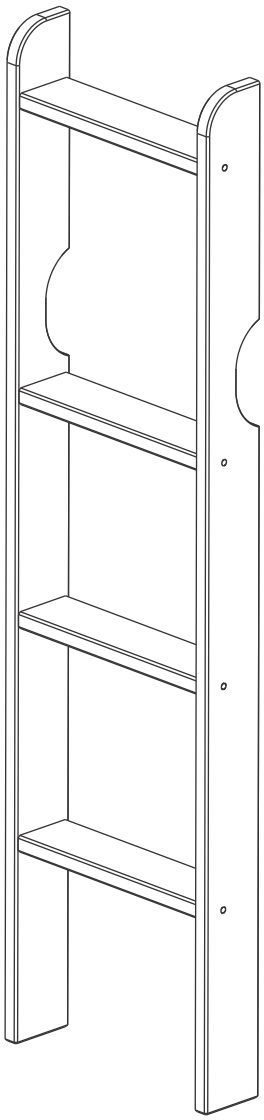

Thank you for purchasing your Furniture from Bedz King.

Every effort has been made to ensure your Furniture is of the finest quality. If you have any questions, please do not hesitate to contact us at info@bedzking.com

READ THESE INSTRUCTIONS CAREFULLY
BEFORE ATTEMPTING TO ASSEMBLE THIS BED

SAFETY WARNINGS AND GENERAL NOTES

✓ Follow the information on the warning labels on the upper bunk bed structure and on the carton. Do not remove warning label from the bed.

✓ Always use the recommended size mattress or mattress support, or both, to help prevent the likelihood of entrapment or falls.

✓ The top surfaces of the mattress must be at least 5"below the upper edge of the guardrails.

✓ **Do not** allow children under 6 years of age to use the upper bunk.

✓ **Prohibit** more than one person on the upper bunk.

✓ Periodically check and ensure that the guardrails, ladder and other components are in their proper position, free from damage, and that all connectors are tight.

✓ **Do not** allow horseplay on or under the bed.Always prohibit jumping on the bed.

✓ Always use the ladder for entering and leaving the upper bunk.

✓ **Do not** use substitute parts. Contact the manufacturer or dealer for replacement parts.

✓ Use of a night-light may provide added safety for a child using the upper bunk.

✓ If the bunk bed will be placed next to the wall, the guardrail that runs the full length of the bed should be placed against the wall to prevent entrapment between the bed and the wall.

✓ Always use guardrails on both long sides of the upper bunk.

✓ The use of a water or sleep floatation mattress is prohibited.

✓ Keep these instructions for future reference.

✓ We recommend assembling your bunk bed on the shipping carton to protect your floor or carpet. Be certain all staples are out of the box before beginning assembly on the shipping carton.

✓ **Strangulation Hazard** Never attach or hang items to any part of the bunk bed that are not designed for use with the bed for example, but not limited to hooks, belts, and jump ropes.

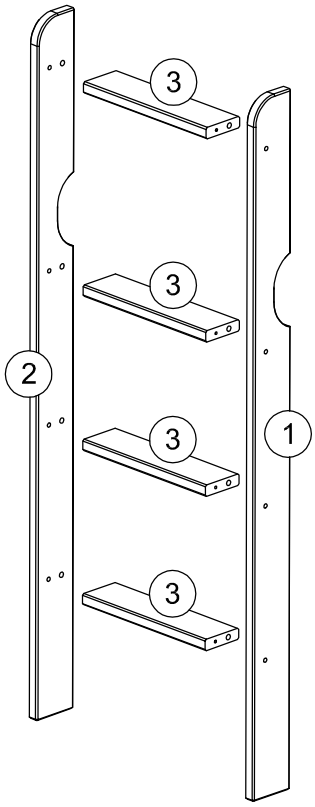

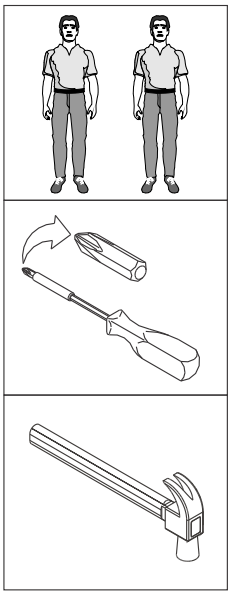

WARNING:
CHOKING HAZARD - - Small Parts
Not for Children.
To be Assembled by an Adult.

SCREWS ARE SHOWN IN ACTUAL SIZE

		Qty.	Extra
A10	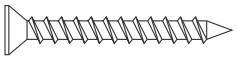 3,5x30	8	
A22	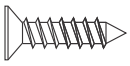 4,0x16	4	
B8	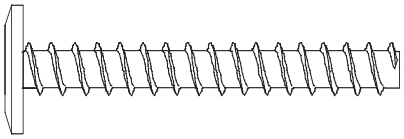 7,0x50	8	+1
C3	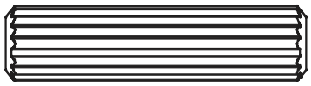 10x40	8	+1
D14	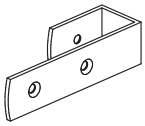	4	
G8	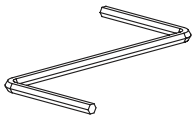	1	
G9		4	

01

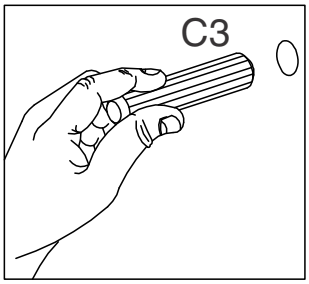
C3

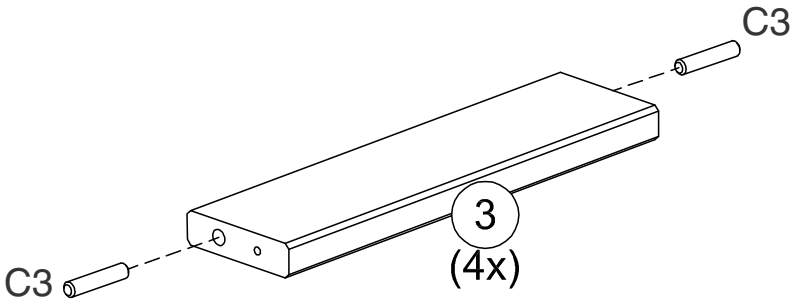
C3
C3
3
(4x)

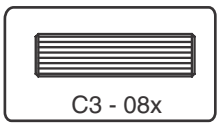
C3 - 08x

02

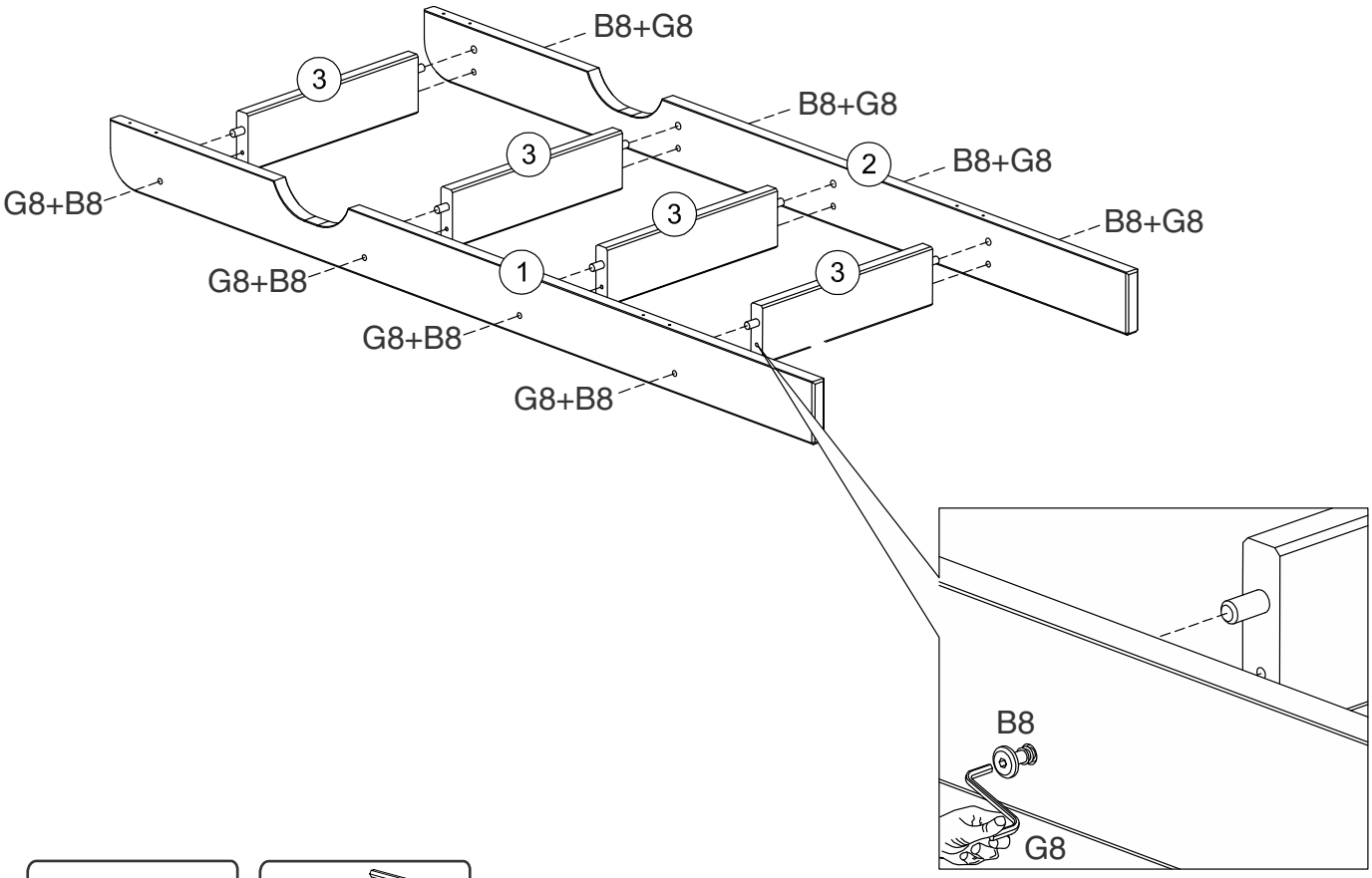
B8+G8
B8+G8
B8+G8
B8+G8
G8+B8
G8+B8
G8+B8
G8+B8
3
3
3
3
2
1
B8
G8

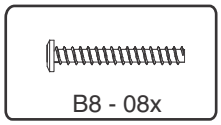
B8 - 08x

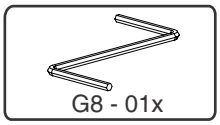
G8 - 01x

03

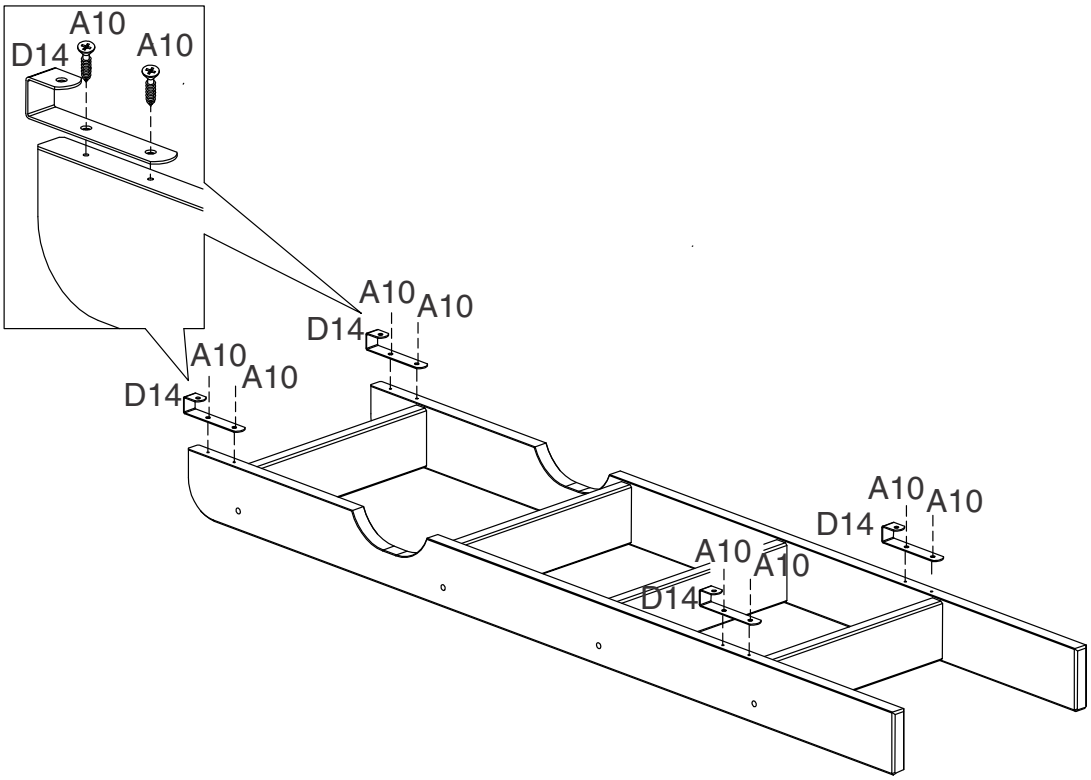
A10
D14
A10
A10
A10
D14
A10
A10
D14
A10
A10
D14
A10
A10
D14

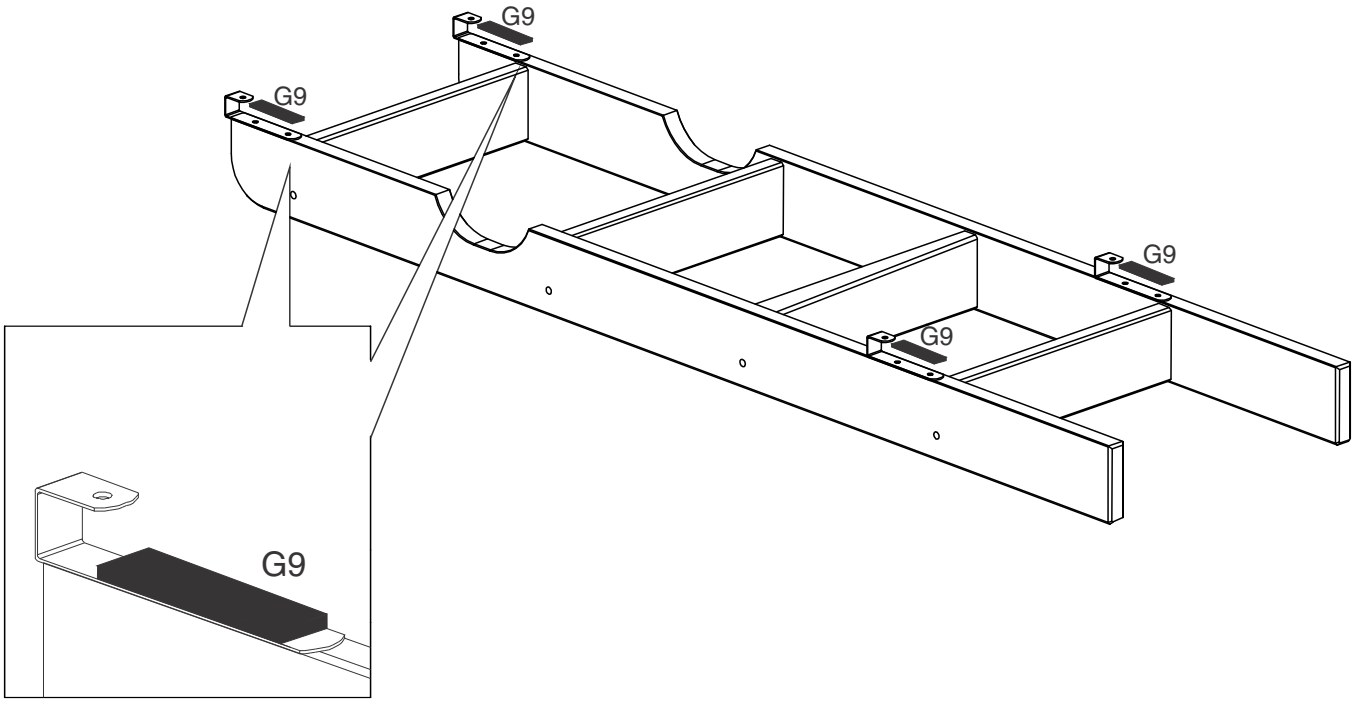
G9
G9
G9
G9
G9

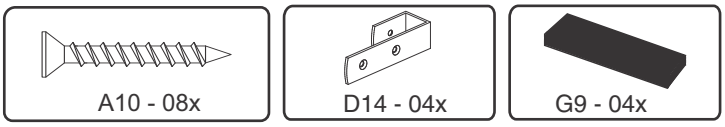
A10 - 08x
D14 - 04x
G9 - 04x

04

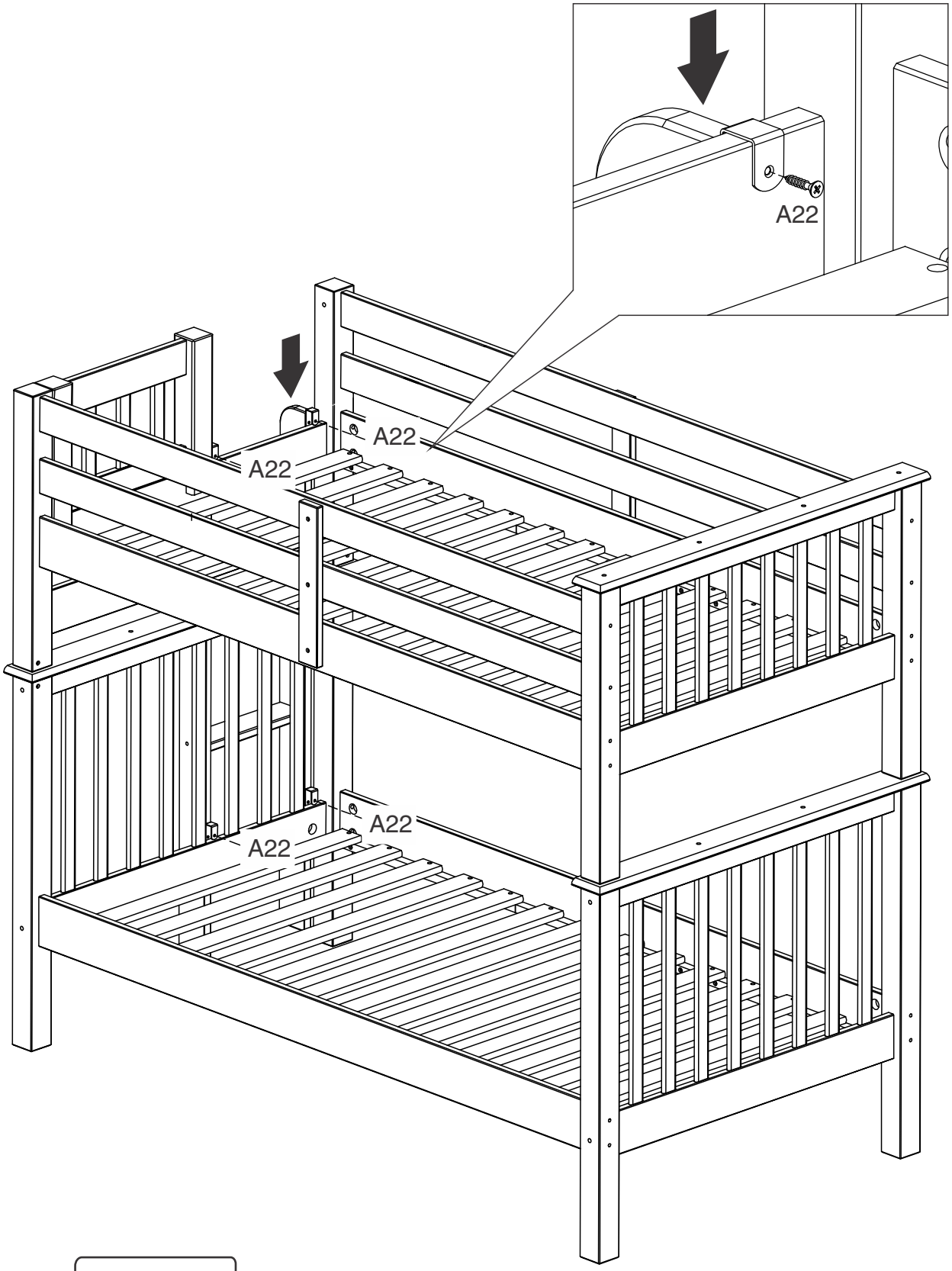

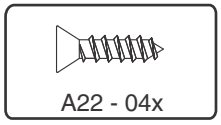

BEDDING SPECIFICATION

- Always use the recommended size mattress or mattress support or both, to help prevent the likelihood of entrapment or falls.
- All Bedz King bunk beds are supplied with a complete slat kit, so there is no need for a foundation or bunkie board.

BED MATTRESS SPECIFICATIONS

TWIN OVER TWIN

Upper Bunk: Only use a mattress that is 74" - 75" long and 37 1/2" - 38 1/2" wide on the upper bunk.
- Ensure thickness of mattress and foundation combined does not exceed 9".

Lower Bunk: Only use a mattress that is 74" - 75" long and 37 1/2" - 38 1/2" wide on the lower bunk.

TWIN OVER FULL

Upper Bunk: Only use a mattress that is 74" - 75" long and 37 1/2" - 38 1/2" wide on the upper bunk.
- Ensure thickness of mattress and foundation combined does not exceed 9".

Lower Bunk: Only use a mattress that is 74" - 75" long and 52 1/2" - 53 1/2" wide on the lower bunk.

FULL OVER FULL

Upper Bunk: Only use a mattress that is 74" - 75" long and 52 1/2" - 53 1/2" wide on the upper bunk.
- Ensure thickness of mattress and foundation combined does not exceed 9".

Lower Bunk: Only use a mattress that is 74" - 75" long and 52 1/2" - 53 1/2" wide on the lower bunk.

REPLACEMENT PARTS

- Replacement parts, including additional guardrails may be obtained by contacting Bedz King LLC at info@bedzking.com
- Guard rails are not available for the lower bunk. This bunk bed is not designed or certified to have guard rails installed on the lower bunk.

ASSEMBLYTIPS

- Power tools are not recommended for assembling your furniture.
- Give yourself plenty of room to work.
- Due to the size of this bunkbed, it must be assembled within the space it will occupy.
- The assembly will require at least two people to complete.
- Make sure all the fasteners are tight.
- Take your time and read the instructions carefully.

30 Twin Trundle

Assembly Instructions

BEDZ KING

Our prices let you sleep at night!

30 Twin Trundle

Assembly Video

Twin Trundle

Bedz King BK 30

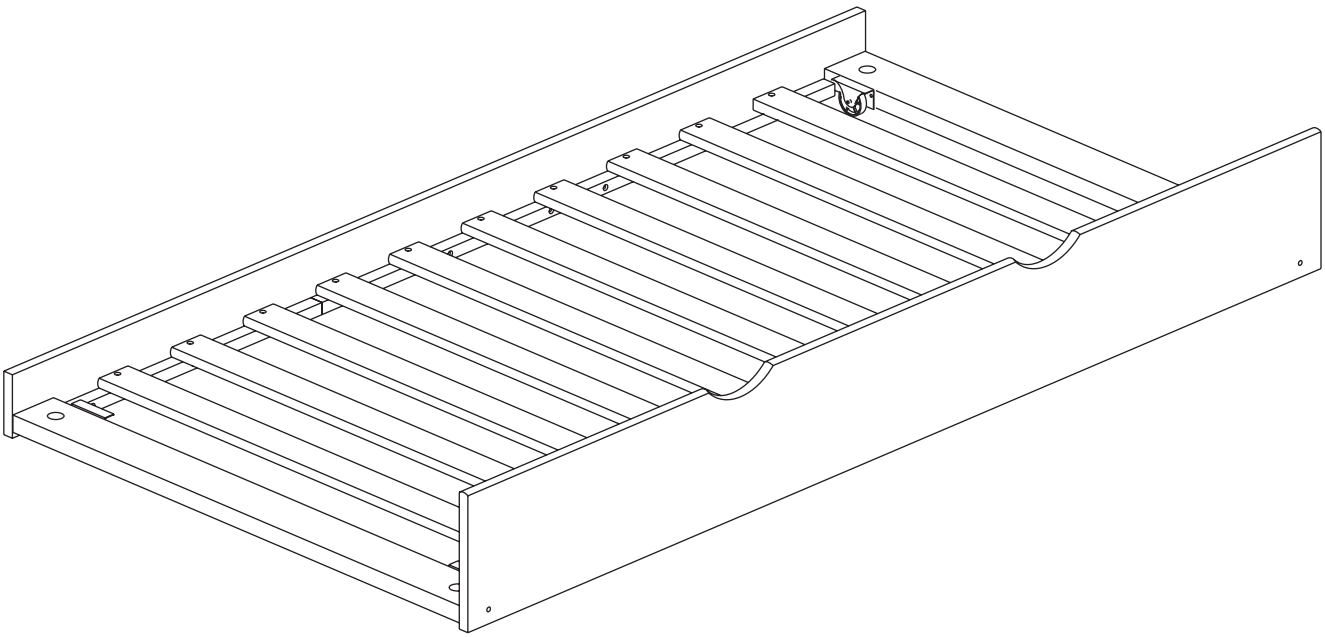

Thank you for purchasing your furniture from Bedz King.

Every effort has been made to ensure your furniture is of the finest quality. If you have any questions, please do not hesitate to contact us at info@bedzking.com

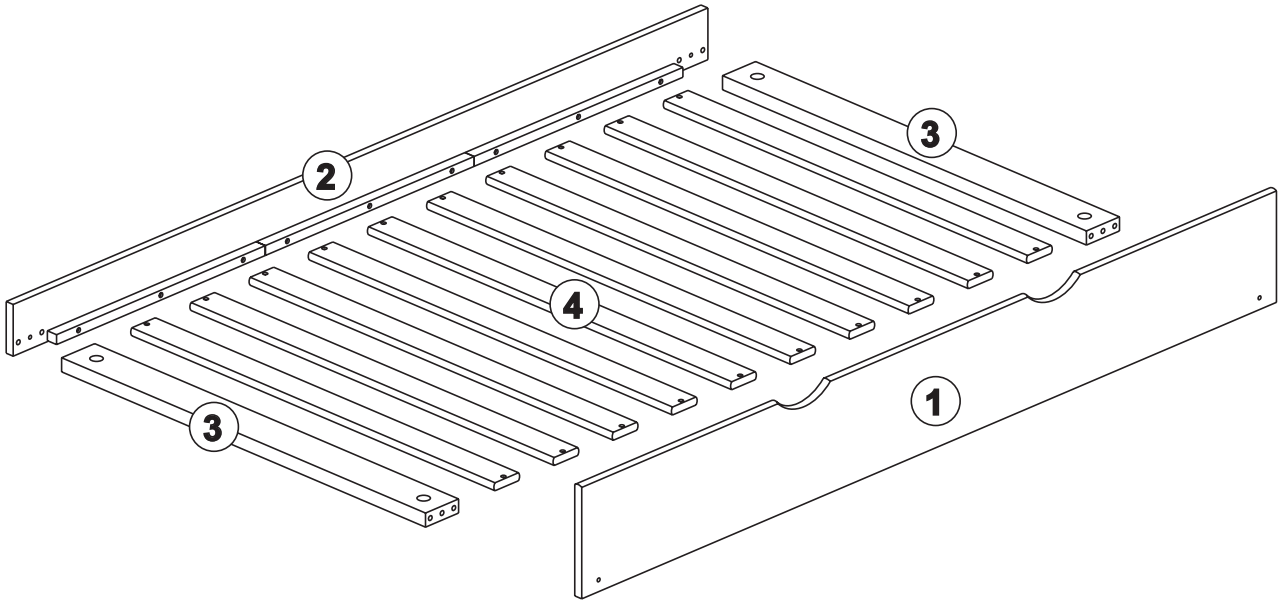

SCREWS ARE SHOWN IN ACTUAL SIZE

		Qty.	Extra
A5	3,5x16	16	
A12	4,0x35	20	
B5	1/4"	4	+1
B18	1/4"x70	4	
C3	10x40	8	+1
E8		4	
G3		1	
G4	space block	2	

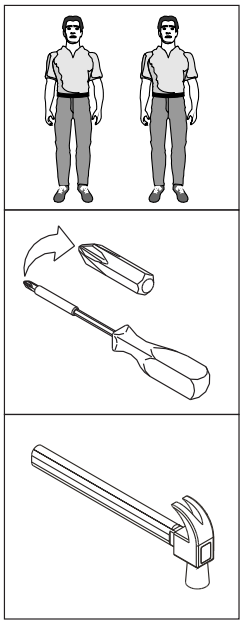

WARNING:
CHOKING HAZARD -
- Small Parts
Not for Children.
To be Assembled by
an Adult.

01

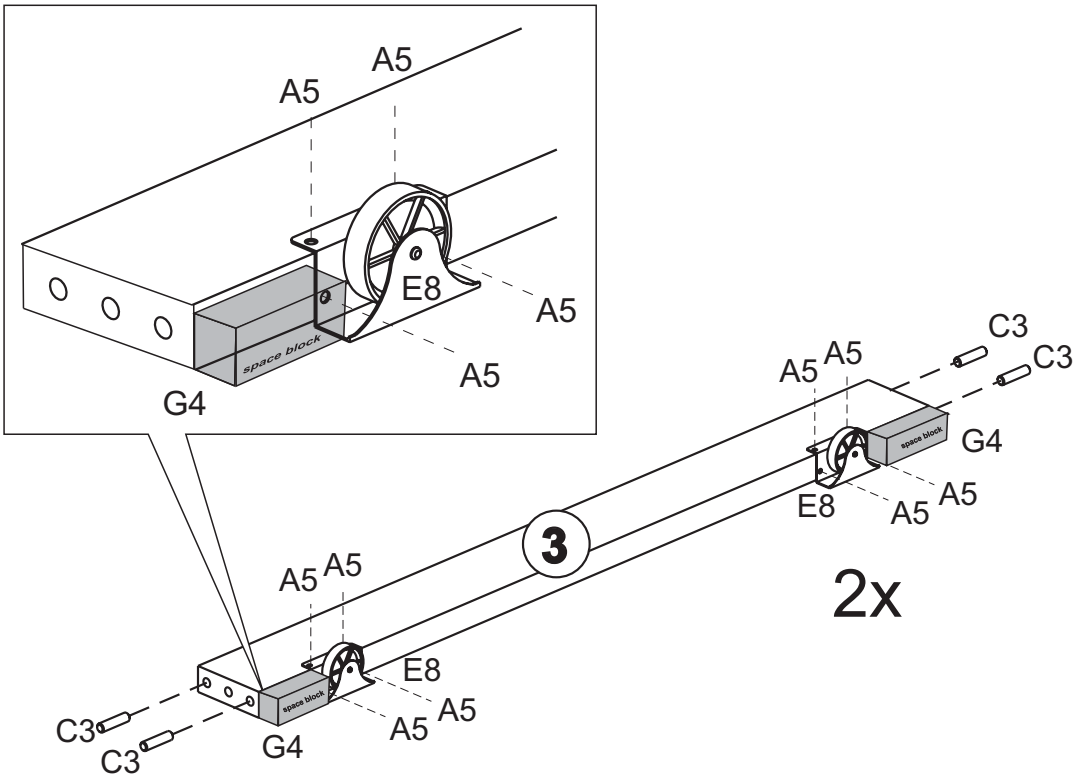
A5
A5
E8
A5
A5
space block
G4
C3
C3
A5
A5
space block
G4
E8
A5
A5
3
2x
A5
A5
E8
space block
A5
A5
C3
C3
G4

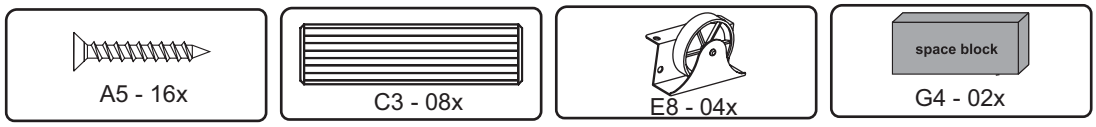
A5 - 16x
C3 - 08x
E8 - 04x
space block
G4 - 02x

02

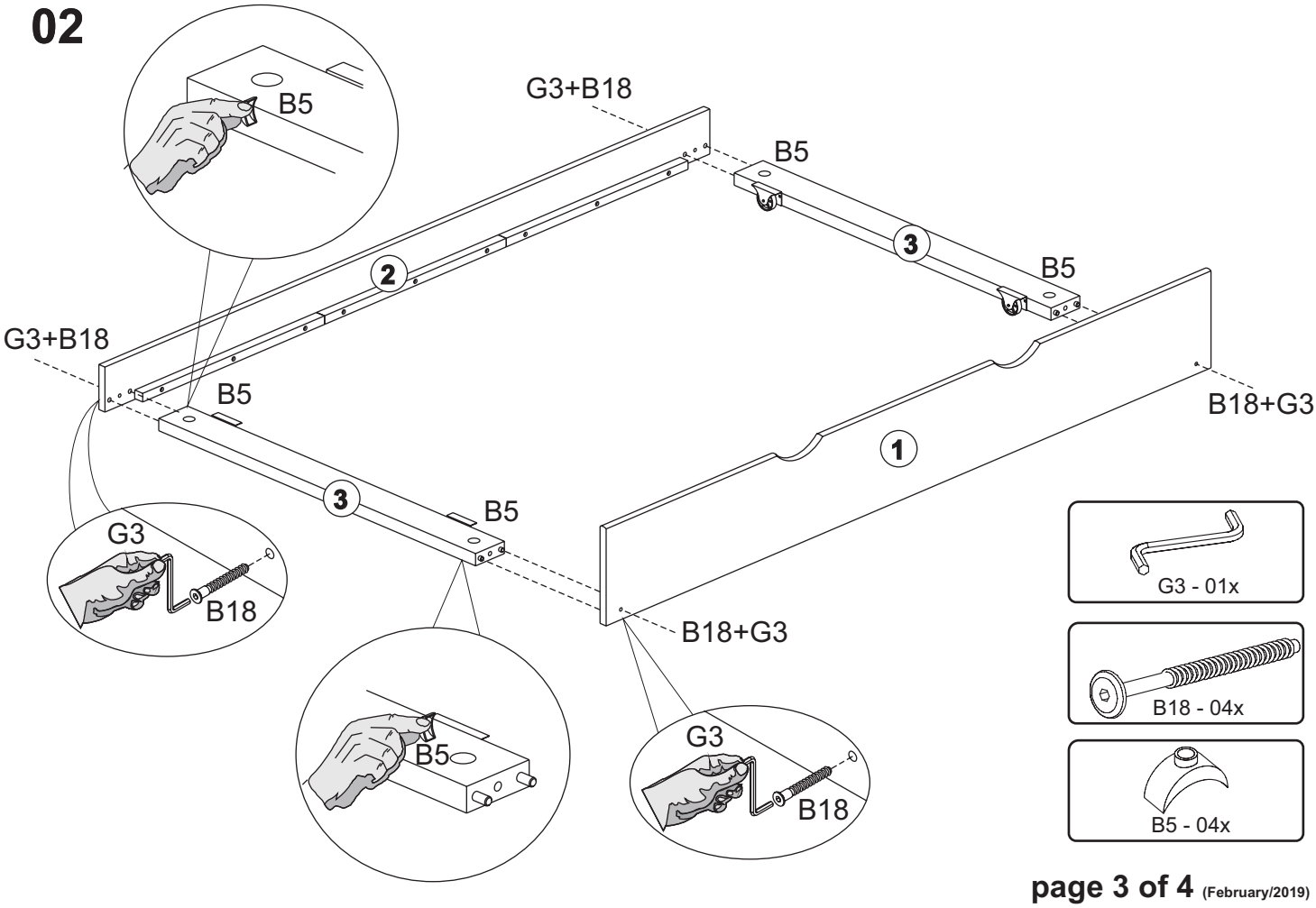
B5
G3+B18
B5
3
B5
2
G3+B18
B5
B18+G3
1
3
B5
G3
B18
B18+G3
B5
G3
B18
G3 - 01x
B18 - 04x
B5 - 04x

03

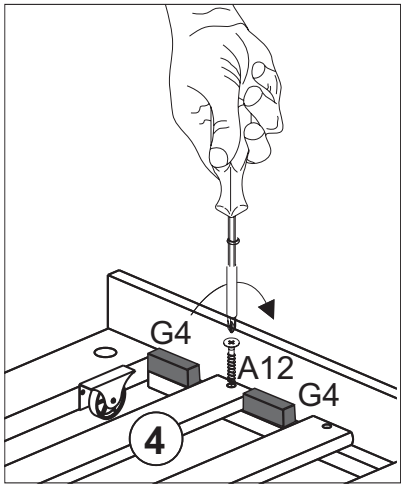

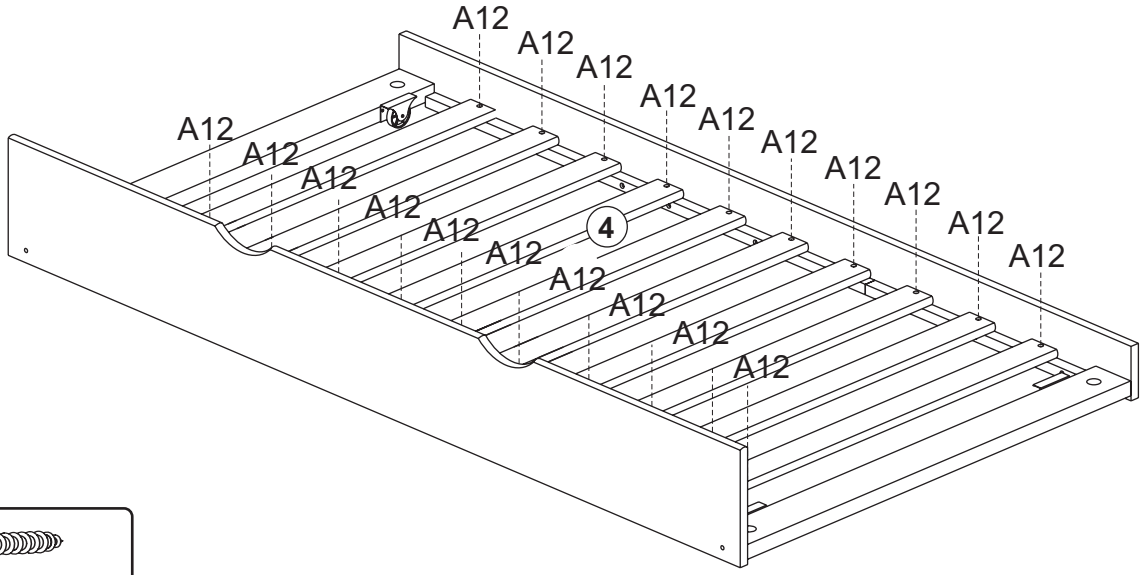

A12 - 20x

G4 - 02x